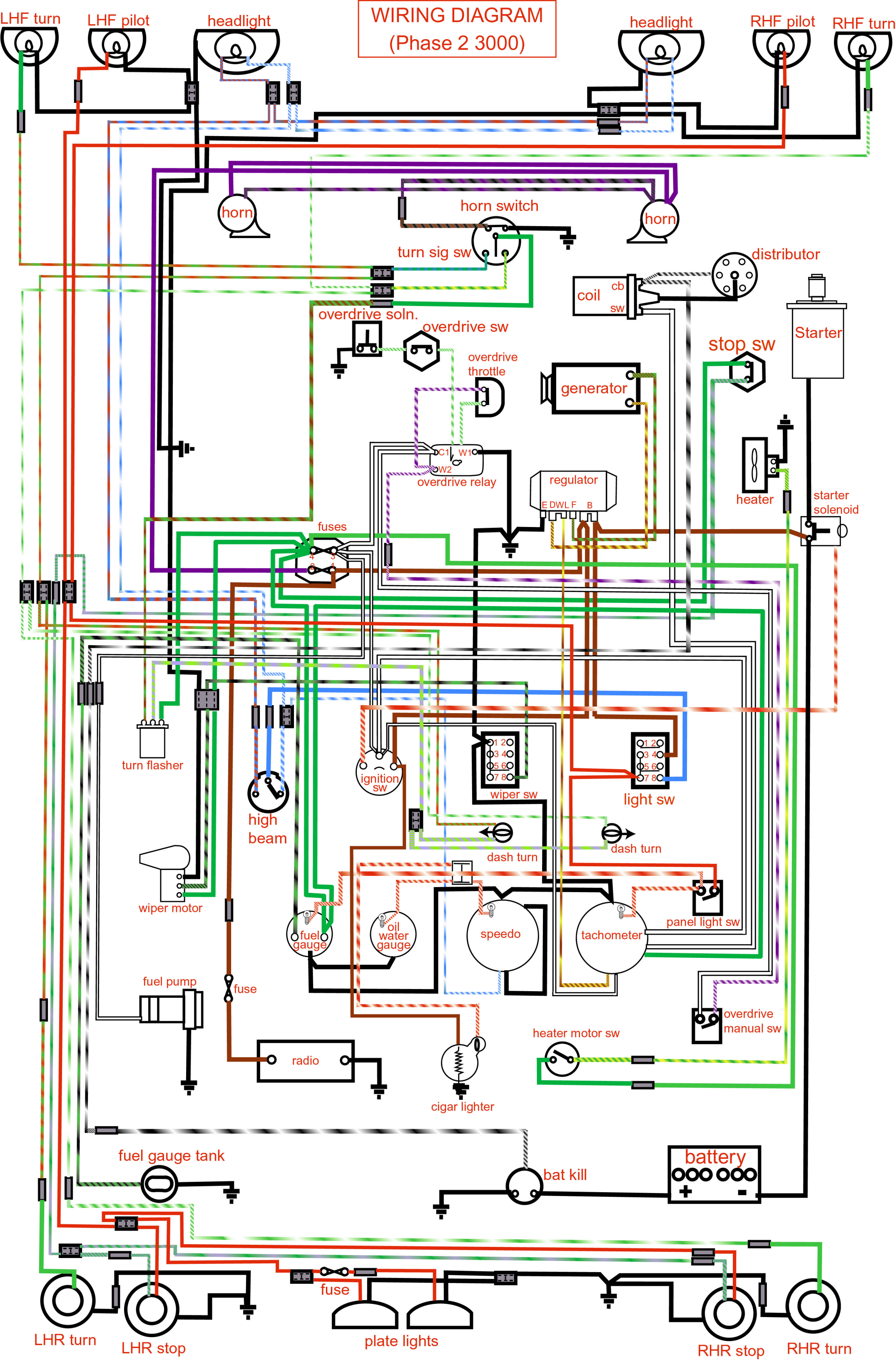WIRING DIAGRAM (Phase 2 3000)